BMA PLUG (MALE) TERMINATION 18GHZ

ST1863

SPECIFICATIONS

ELECTRICAL
- FREQUENCY: 0-18 GHZ
- IMPEDANCE: 50 OHMS
- VSWR: 1.2:1 MAX @ 18GHZ
- POWER: 1 WATT

MECHANICAL
- MATERIAL BODY: PASS. STAINLESS STEEL
- CONTACTS: BeCu
- CONTACT PLATING: Au PER MIL-G-45204
- INSULATOR: PTFE
- TEMPERATURE RANGE: -55 TO +120°C

ROHS COMPLIANT

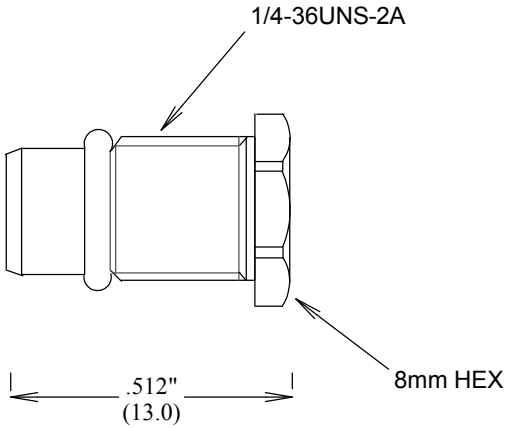

MEASUREMENTS BELOW ARE TYPICAL

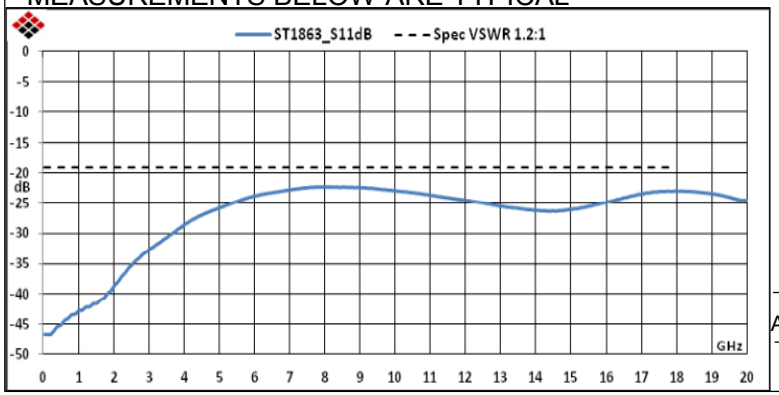

ALL DIMENSIONS IN inches(MM) Typical

FAIRVIEW MICROWAVE INC.
ALLEN, TX 75013 WWW.FAIRVIEWMICROWAVE.COM

TITLE
BMA PLUG (MALE) TERMINATION 18GHZ

SIZE	CAGE CODE	DWG NO	REV
A	3FKR5	ST1863	A

SCALE		SHEET