Fairview Microwave
RF COMPONENTS ON DEMAND. Done!

SA3DMM300W-10
DATA SHEET

10 dB Fixed Attenuator 7/16 Male To 7/16 Male Directional Up To 3 GHz Rated To 300 Watts With Black Aluminum Heatsink Body

Features:
- Design: Fixed, Directional Attenuator
- Connector 1: 7/16 DIN Male
- Connector 2: 7/16 DIN Male
- Body Material and Plating: Black Aluminum Heatsink

Electrical Specifications*

Description	Min	Typ	Max	Units
Frequency Range	DC		3	GHz
Impedance		50		Ohms
Attenuation Value		10		dB
Attenuation Accuracy		1		dB
Input Power			300	Watts
Peak Power			2.5	KWatts
VSWR			1.4:1	

* Values at 25°C, sea level

Specifications by Frequency

Description	F1	F2	F3	F4	F5	Units
Range	DC to 1.5	1.5 to 3				GHz
VSWR	1.2:1	1.4:1				
Attenuation Value	10	10				dB
Atten. Accuracy	± 0.75	± 1				dB

Mechanical Specifications

Temperature

Operating Range	-55 to +125 deg C
Width	6.2 in [157.48 mm]
Height	6.3 in [160.02 mm]

Connectors

Description	Connector 1	Connector 2
Type	7/16 DIN Male	7/16 DIN Male
Contact Material & Plating	Brass, Silver	Brass, Silver
Coupling Nut Material & Plating	Brass, Silver	Brass, Silver
Hex Size	7/16 Inch	7/16 Inch
Torque	25 in-lbs [2.83 Nm]	25 in-lbs [2.83 Nm]
Body Material & Plating	Brass, Silver	Brass, Silver

Compliance Certifications (visit www.FairviewMicrowave.com for current document)

RoHS Compliant Yes

Plotted and Other Data

Notes:
- Values at 25 °C, sea level
- Calculated Heatsink Thermal Rise: .7C / Watt

Fairview Microwave
1130 Junction Dr. #100
Allen, TX 75013
Tel: 1-800-715-4396 / (972) 649-6678
Fax: (972) 649-6689
www.fairviewmicrowave.com
sales@fairviewmicrowave.com

Copyright © 2014

10 dB Fixed Attenuator 7/16 Male To 7/16 Male Directional Up To 3 GHz Rated To 300 Watts With Black Aluminum Heatsink Body from Fairview Microwave is in-stock and available to ship same-day. All of our RF/microwave products are available off-the-shelf from our ISO 9001:2008 certified facilities in Allen, Texas. Fairview Microwave is RF on-demand.

For additional information on this product, please click the following link: 10 dB Fixed Attenuator 7/16 Male To 7/16 Male Directional Up To 3 GHz Rated To 300 Watts With Black Aluminum Heatsink Body SA3DMM300W-10

URL: http://www.fairviewmicrowave.com/10db-fixed-attenuator-7-16-male-7-16-male-300-watts-sa3dmm300w-10-p.aspx

The information contained in this document is accurate to the best of our knowledge and representative of the part described herein. It may be necessary to make modifications to the part and/or the documentation of the part, in order to implement improvements. Fairview Microwave reserves the right to make such changes as required. Unless otherwise stated, all specifications are nominal. Fairview Microwave does not make any representation or warranty regarding the suitability of the part described herein for any particular purpose, and Fairview Microwave does not assume any liability arising out of the use of any part or documentation.

Table of Information	
Connector Type	Dim "A" (Ref.)
SMA Male	0.88
SMA Female	0.73
TNC Male	1.06
TNC Female	1.16
N Female	1.19
N Male	1.23
7/16 Male	1.38
7/16 Female	1.42

Part Number Configuration		
xx	Input Connector	Output Connector
SMM	SMA Male	SMA Male
SMF	SMA Male	SMA Female
SFF	SMA Female	SMA Female
SFM	SMA Female	SMA Male
NMM	N Male	N Male
NMF	N Male	N Female
NFF	N Female	N Female
NFM	N Female	N Male
TMM	TNC Male	TNC Male
TMF	TNC Male	TNC Female
TFF	TNC Female	TNC Female
TFM	TNC Female	TNC Male
DMM	7/16 Male	7/16 Male
DMF	7/16 Male	7/16 Female
DFF	7/16 Female	7/16 Female
DFM	7/16 Female	7/16 Male
- yy	Indicates Attenuation Level	

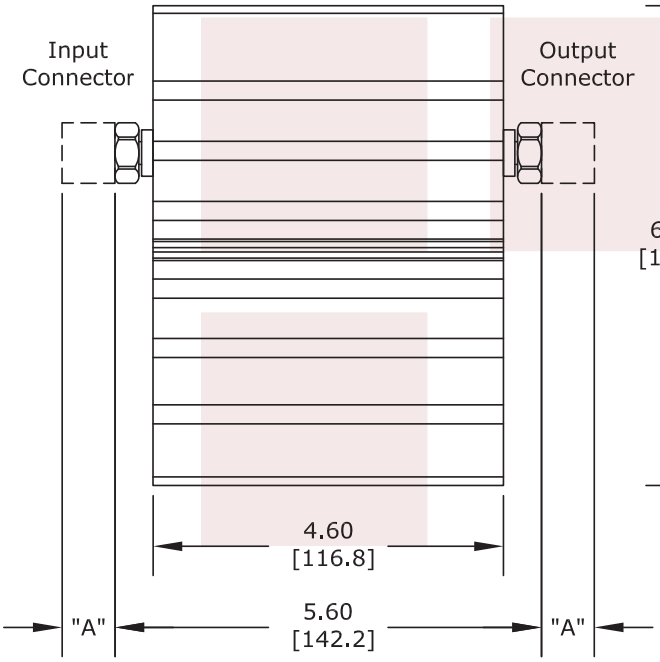

SIDE VIEW

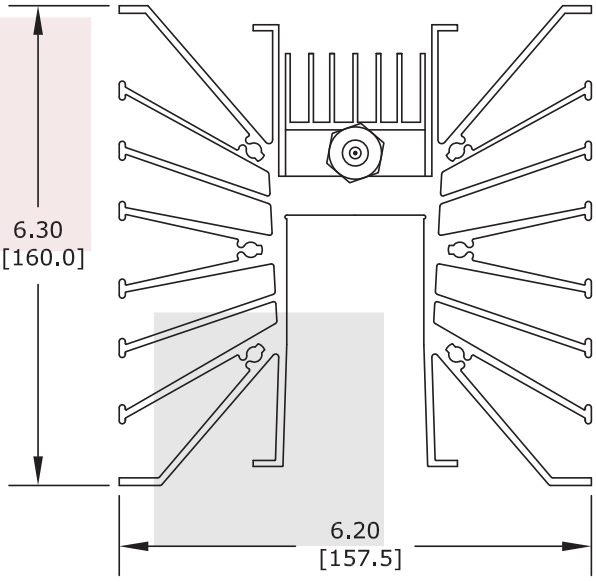

FRONT VIEW

FAIRVIEW MICROWAVE INC. ALLEN, TX 75013 WWW.FAIRVIEWMICROWAVE.COM	NOTES: 1. UNLESS OTHERWISE SPECIFIED ALL DIMENSIONS ARE NOMINAL. 2. ALL SPECIFICATIONS ARE SUBJECT TO CHANGE WITHOUT NOTICE AT ANY TIME. 3. DIMENSIONS ARE IN INCHES [mm].				
TITLE 10 dB Fixed Attenuator 7/16 Male To 7/16 Male Directional Up To 3 GHz Rated To 300 Watts With Black Aluminum Heatsink Body	DWG NO SA3xxx300W-yy		CAGE CODE 3FKR5		
	CAD FILE 090914	SHEET	SCALE N/A	SIZE A	2233

1130 Junction Dr. #100 Allen, TX 75013 | Tel: 1-800-715-4396 / (972) 649-6678 / Fax: (972) 649-6689

Copyright © 2014